CEE 7/17 IP44 Schuko German Plug

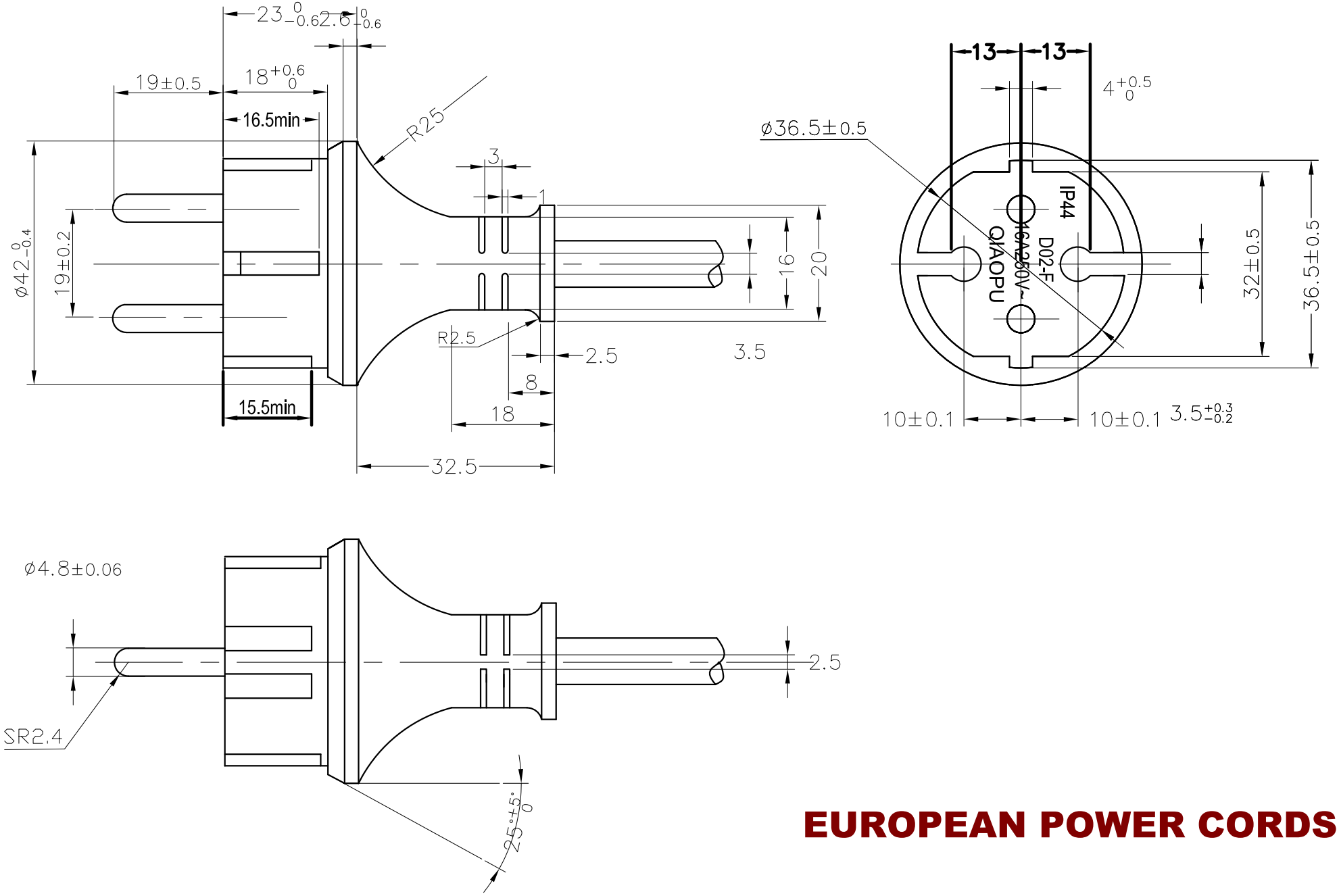

EUROPEAN POWER CORDS