CEI 23-16 2 pin plug Italy Power Plug

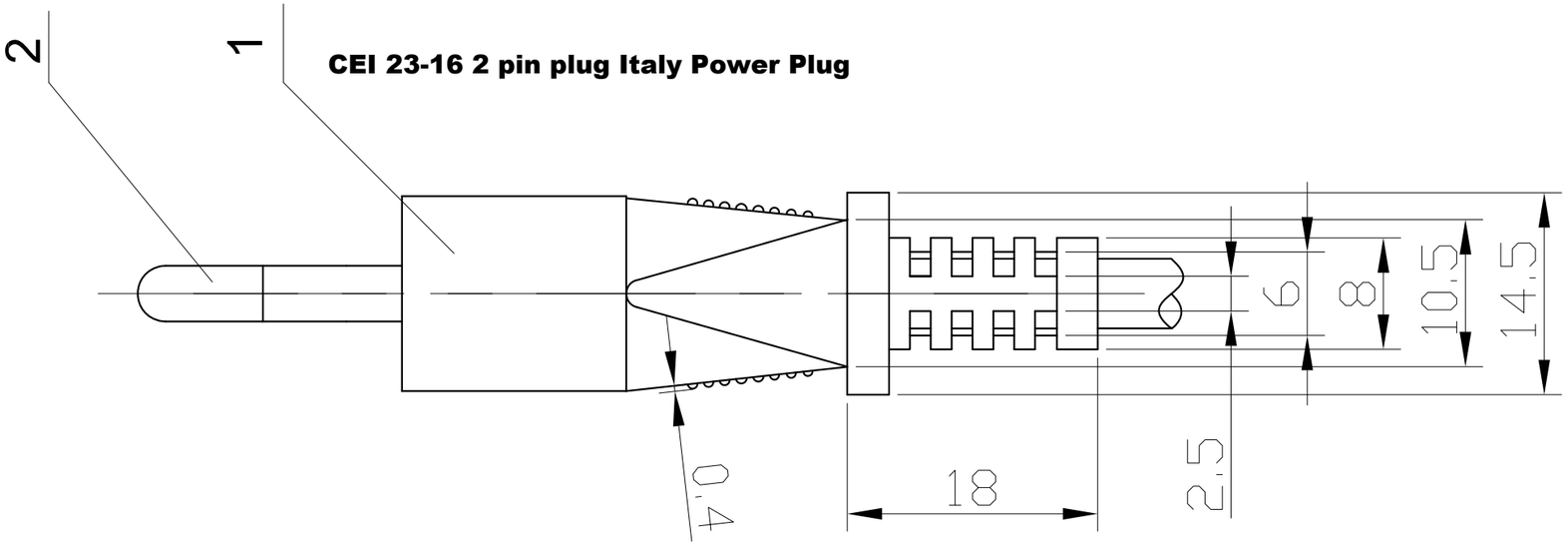

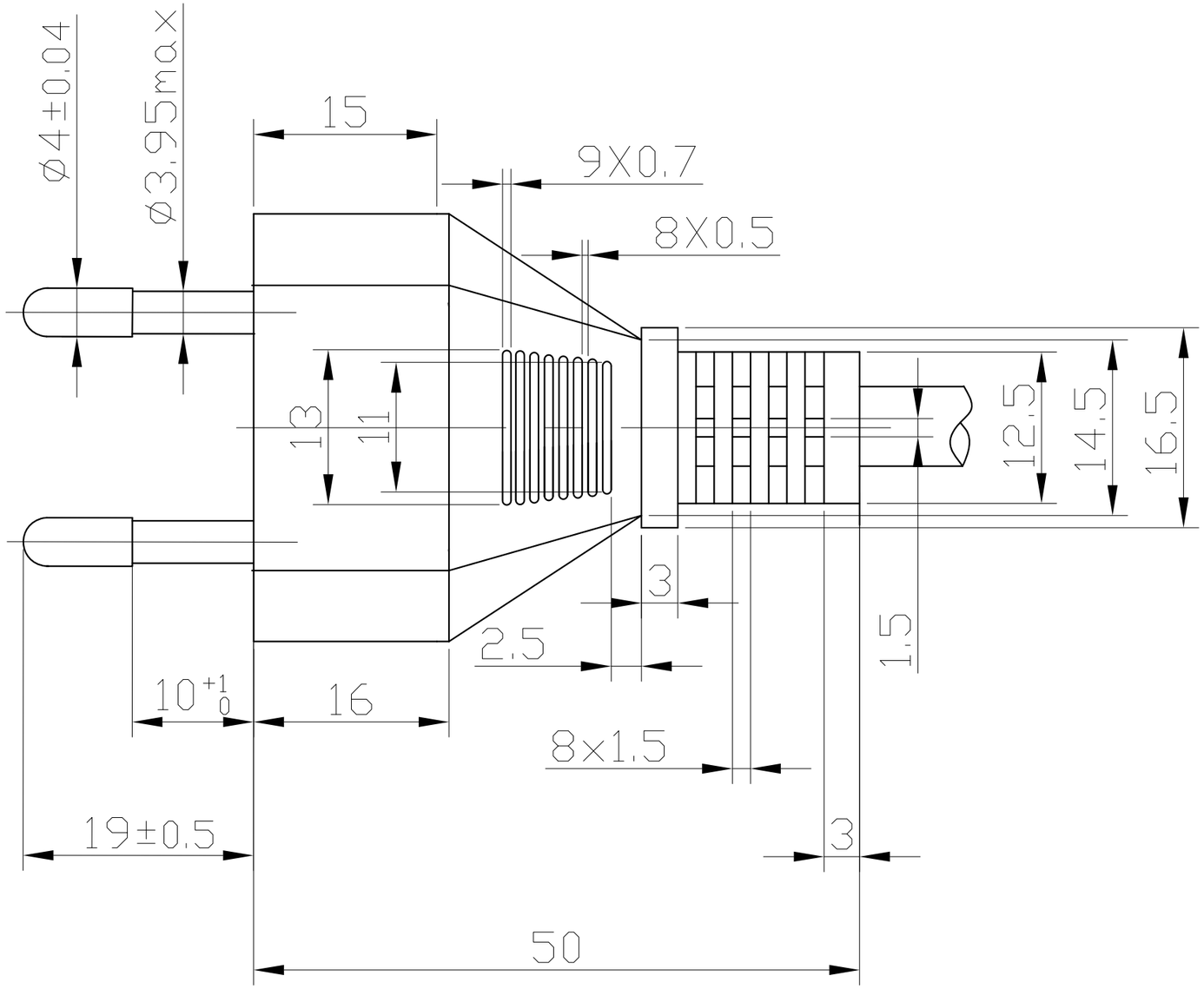

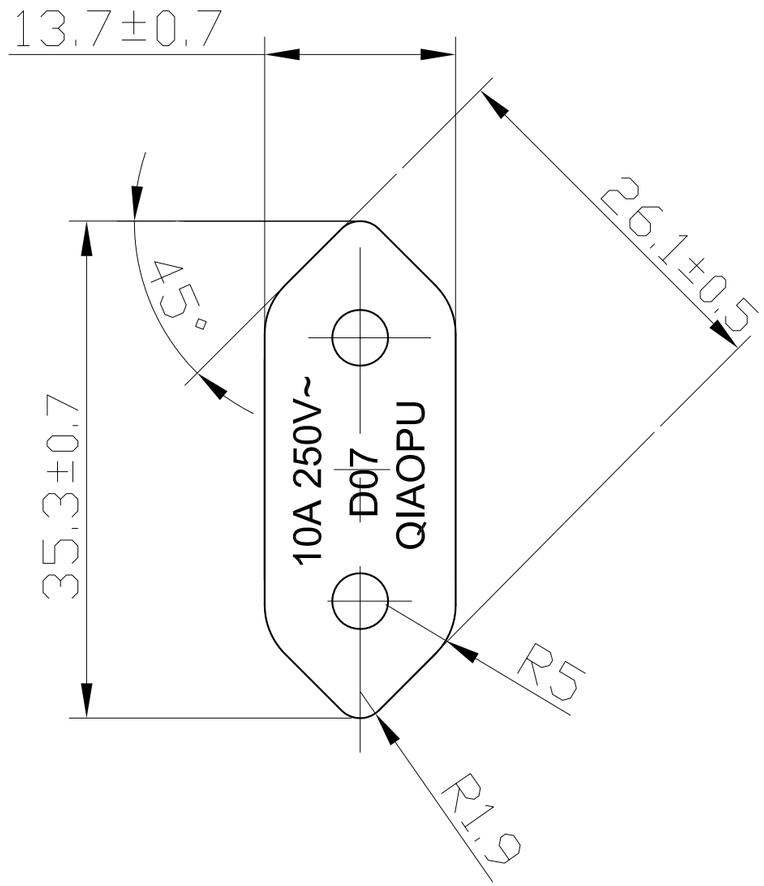

ITALIAN POWER CORDS