Euro Plug CEE 7/16 Power Cord

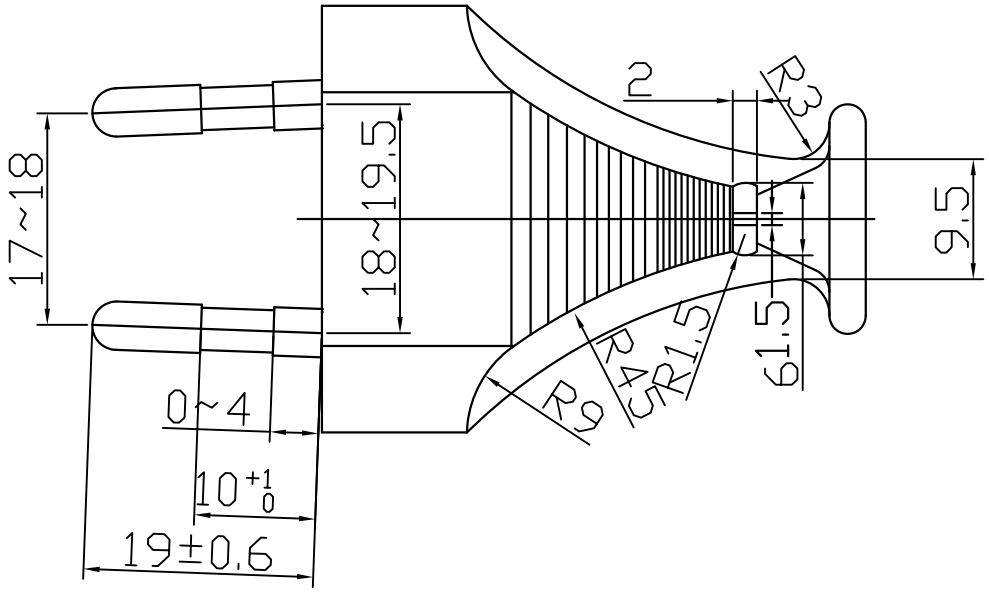

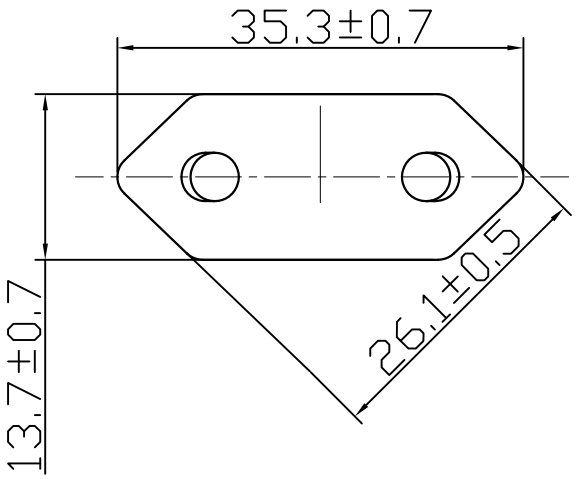

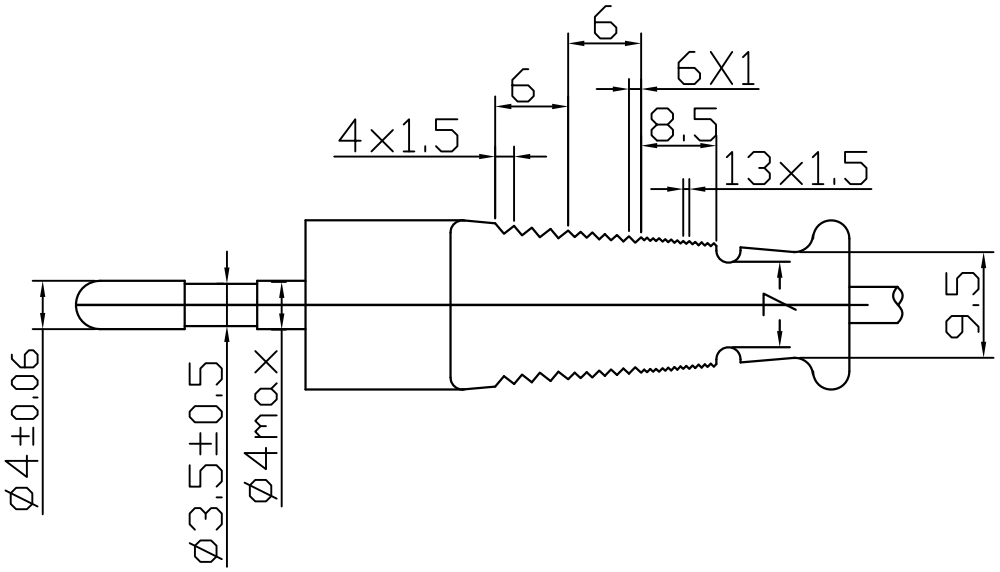

EUROPEAN POWER CORDS