Korean KSC 8305 KTL KC 2 Pin 16A Plug Power Cord

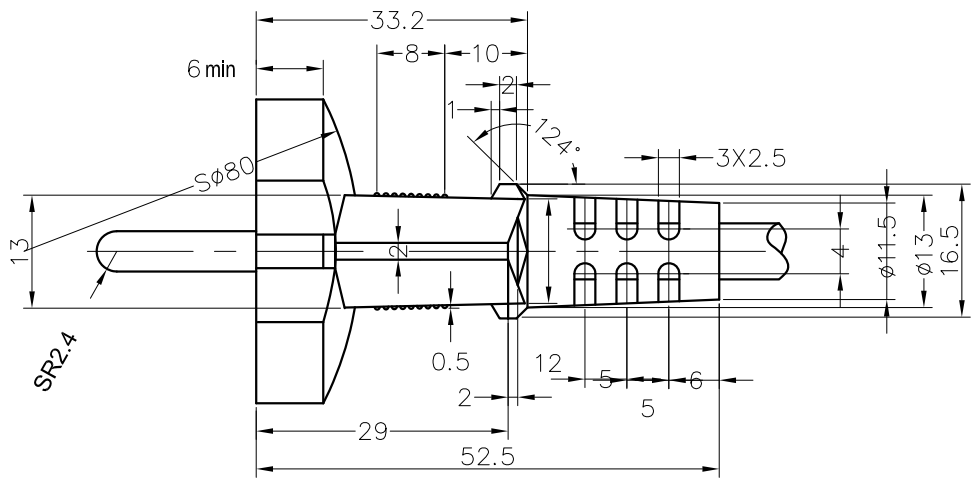

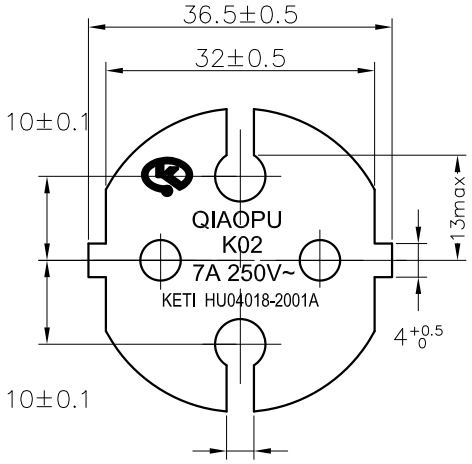

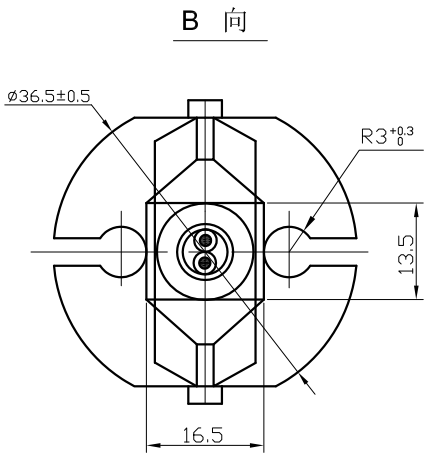

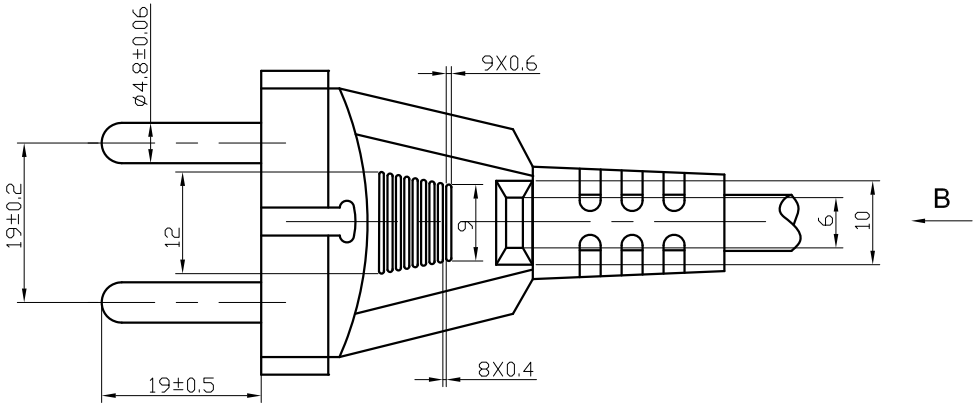

3.3~6.6

KOREAN POWER CORDS